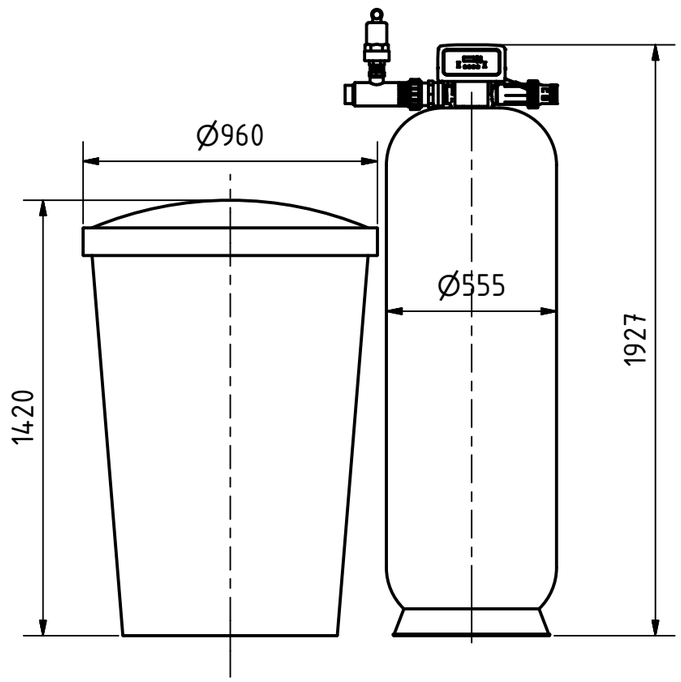

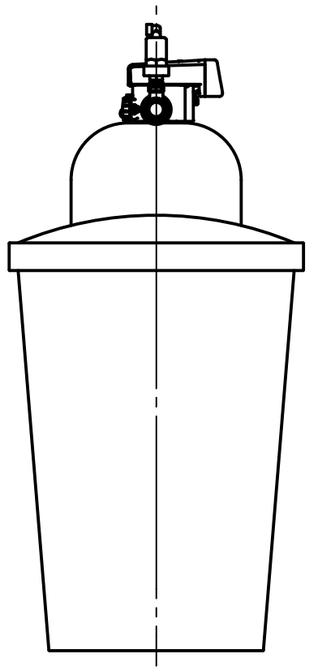



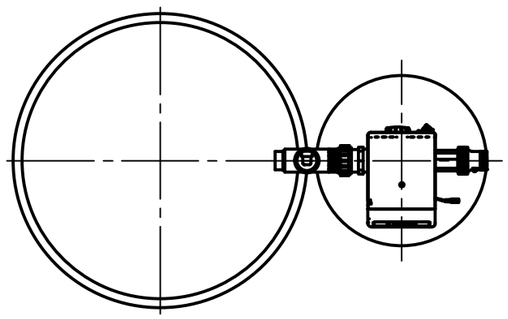

Client	Name	DANUM s.r.o. Bottova 2899/1 945 01 Komárno Slovakia T: +421 (0) 915 769 119 E: danum@danum.sk W: www.danum.sk	Danum Komplexná úprava vody
	Unit		

Client Drw.		*This drawing, designs and conceptions contained herein are property of DANUM s.r.o. and are not to be copied, reproduced, duplicated, modified or used in whole or in part without prior permission of DANUM s.r.o.*
Title	Hydrosoft 800V HYS2	

Projection	Reference		Project	Drawing	Sheet	Revision
	Format	Scale				
	A3	1 : 20	—	—	—	